Emergency Stop Switch
1NO+2NC

multicomp

RoHS Compliant

Specifications

Mechanical Life	: >0.25 million operations
Electrical Life	: >0.1 million operations
Rated Insulation Voltage	: 600V
Rated Thermal Current	: 10A
Insulation Resistance	: 100MΩ
Dielectric Strength	: 2,500V AC, 1 minute
Panel Thickness	: 0.8mm to 6mm
Degree of protection	: IP65
Storage Temperature	: -45°C to +85°C
Operating Temperature	: -25°C to +55°C

Contact Ratings

Rated Insulation Voltage		600V			
Rated Thermal Current		10A			
Operating Voltage		24V	120V	240V	380V
AC	Resistive Load (AC-12)	10A	10A	6A	2A
50/60 Hz	Inductive Load (AC-15)	10A	6A	3A	1.9A
DC	Resistive Load (DC-12)	8A	2.2A	1.1A	-
	Inductive Load (DC-13)	4A	1.1A	0.55A	-

Contact Block Mounting Position

Contact		Operator Position		
		Free	Push	-
1	NO		●	
2	NC	●		
3	NC	●		

●=On (closed contact)
Blank=Off (open contact)

Screw Type Emergency Stop Switches

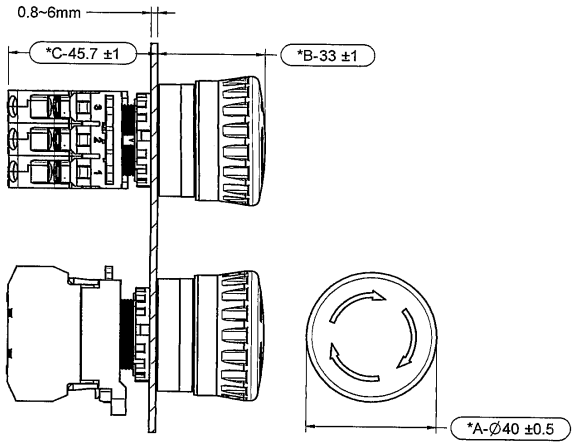

Hole Dia

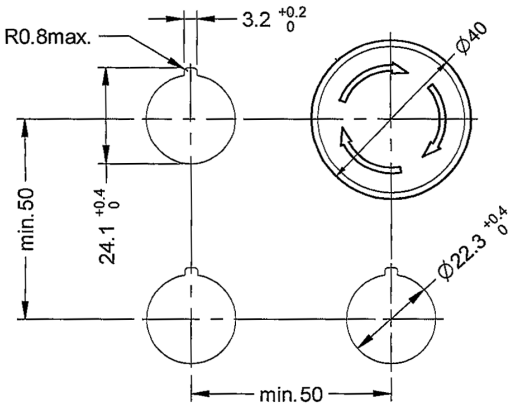

Dimensions : Millimetres

multicomp

© כל הזכויות שמורות - טלמיר אלקטרוניקה בע"מ

Emergency Stop Switch
1NO+2NC

multicomp

Part Number Explanation

MCA20B	-	V	4	E	12	R
Type		Emergency Stop	Mushroom	Standard	1NO+2NC	Red

Part Number Table

Description	Part Number
Emergency Stop Switches, 40mm, 1NO+2NC, Red, Without Lamp	MCA20B-V4E12R

multicomp

© כל הזכויות שמורות - טלמיר אלקטרוניקה בע"מ